WINDROW TURNER

MBA 4512g

The Pronar Mobile Windrow Turner MBA 4512g is used to optimize the parameters of the bialogical compost decomposition on heaps to accelerate this process by releasing excess heat, allowing water to evaporate, or wetting the material, aerating and loosening the dropped waste.

The shaft with a diameter of 1.2 m allows to achieve a capacity of approximately 3000 m³ per hour of compost on prisms up to 4.5 m wide and up to 2.2 m high.

The shaft can rotate at speeds of up to 220 rpm. The choice of direction can be changed at any time by the user, also during work. The knives of the shifting shaft, plowshares, slides of the scraping wings and plowshares of the rear stripping scraper are made of high-resistant steel, thanks to which their service life is increased.

- Air conditioning and heating system ensure comfort at any temperature, and the air cleaning system in the cabin (meeting the EN-15695 standard cat. 4) guarantees clean air without dust and odors from the outside.

High-mounted cab ensures visibility in every direction

Central lubrication system improves the comfort of work and ensures the continuity of lubrication of the most important points of the machine, extending its working life

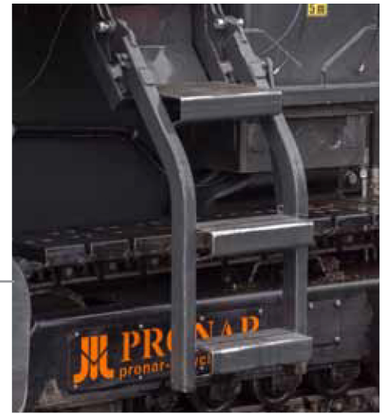

Comfortable and ergonomic entrance thanks to a hydraulically foldable ladder

Four independently adjustable work lamps on both front and back allow to work after dark and in difficult lighting conditions

When working in difficult conditions and high dust content, in order to ensure the reliability of the engine and hydraulic oil cooling system, the radiators have been equipped with an automatic cleaning system (Cleanfix)

Central system for exchange of operating fluids has been placed on the left and right sides of the machine

The camera ensures visibility on the back of the Windrow Turner, making it easier to work and raises the level of security

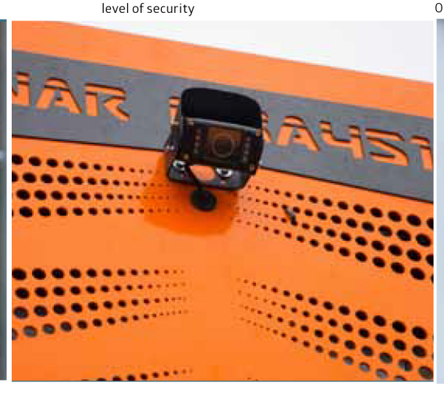

Optional side mirrors - Improve visibility and safety around the machine

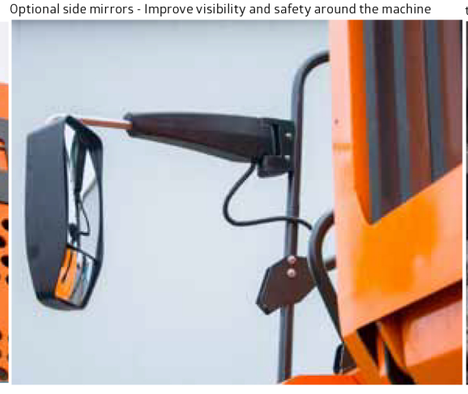

The Windrow Turner with the working shaft has the possibility of lifting 35 cm

MBA 4512g – compost

MBA 4512g – compost

MBA 4512g – compost

Adjustable tailgate limits the ejection of compost

Track drive allows convenient maneuvering of the machine and moving at speeds of up to 4km/h

Sprinkler system mounted on the machine moistens the material to ensure optimal composting conditions

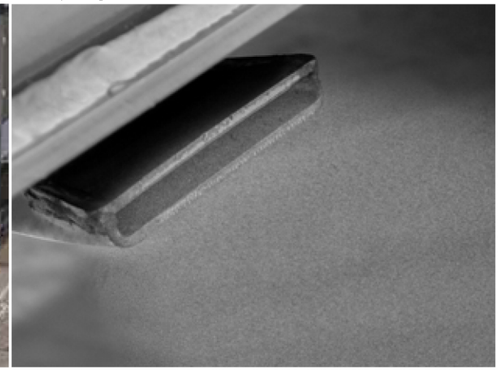

Parking power supply allows to operate the Windrow Turner without starting the diesel engine for service and maintenance

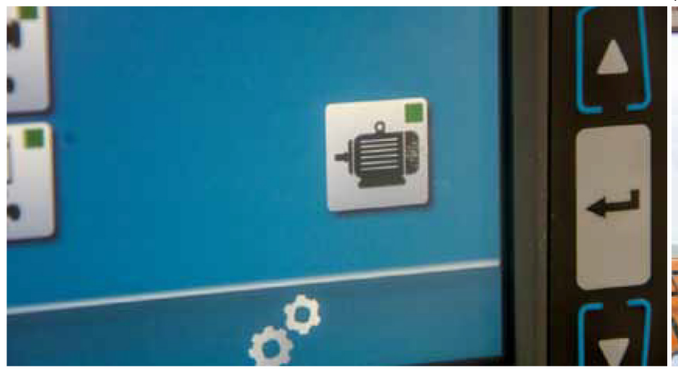

An ergonomic pneumatic suspension seat with automatic positioning, weight control, vibration damping has been installed in the cab

WINDROW TURNER
MBA 4512g

WINDROW TURNER	MPA 4512g
Mass [t]	14
Dimensions (length/width/height)	4,00 / 5,17 / 4,6

WORKING PARAMETERS	MPA 4512g
Shaft diameter[m]	1,2
Max. widht of prism [m]	4,5
Max. hight of prism [m]	2,2
Speed of the shaft [rpm]	0-220
Efficiency [m³/h]	3000

ENGINE	MPA 4512g
	Volvo (EU Stage IV, 160 kW (218 KM)

Other standard equipment:

- Control: two joysticks and a touch screen
- Sunblinds
- Radio MP3
- Machine status indicator with sound signaling
- Rear ripping strip

Additional equipmentne:

- Hydraulic oil heating system to facilitate start of-work at low temperatures
- CB radio - the operator can stay in constant contact with the composting facility
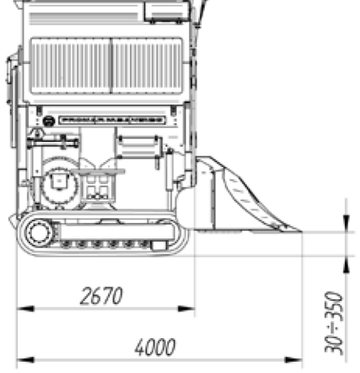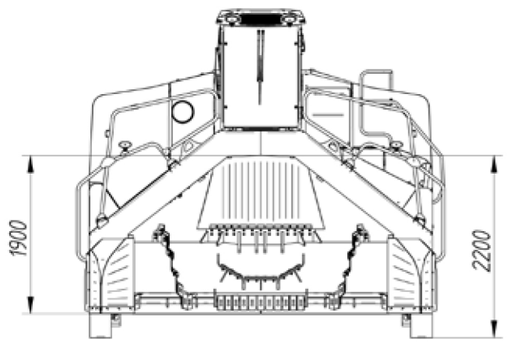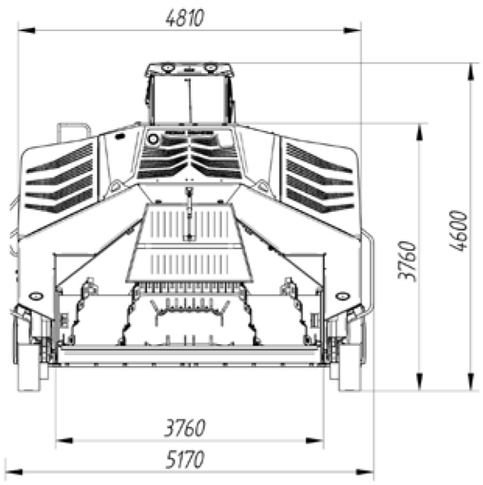
Windrow turner MBA 4512g